q·®§¡~ª=u_rp=E t §°£¢F=k£²µ-°©
¤-°=kqJfmu_=k£²µ-°©=`-¬²°-ªª£°

Total of 32 thermostats on one (1) NetworkThermostat NT-IPXB Controller

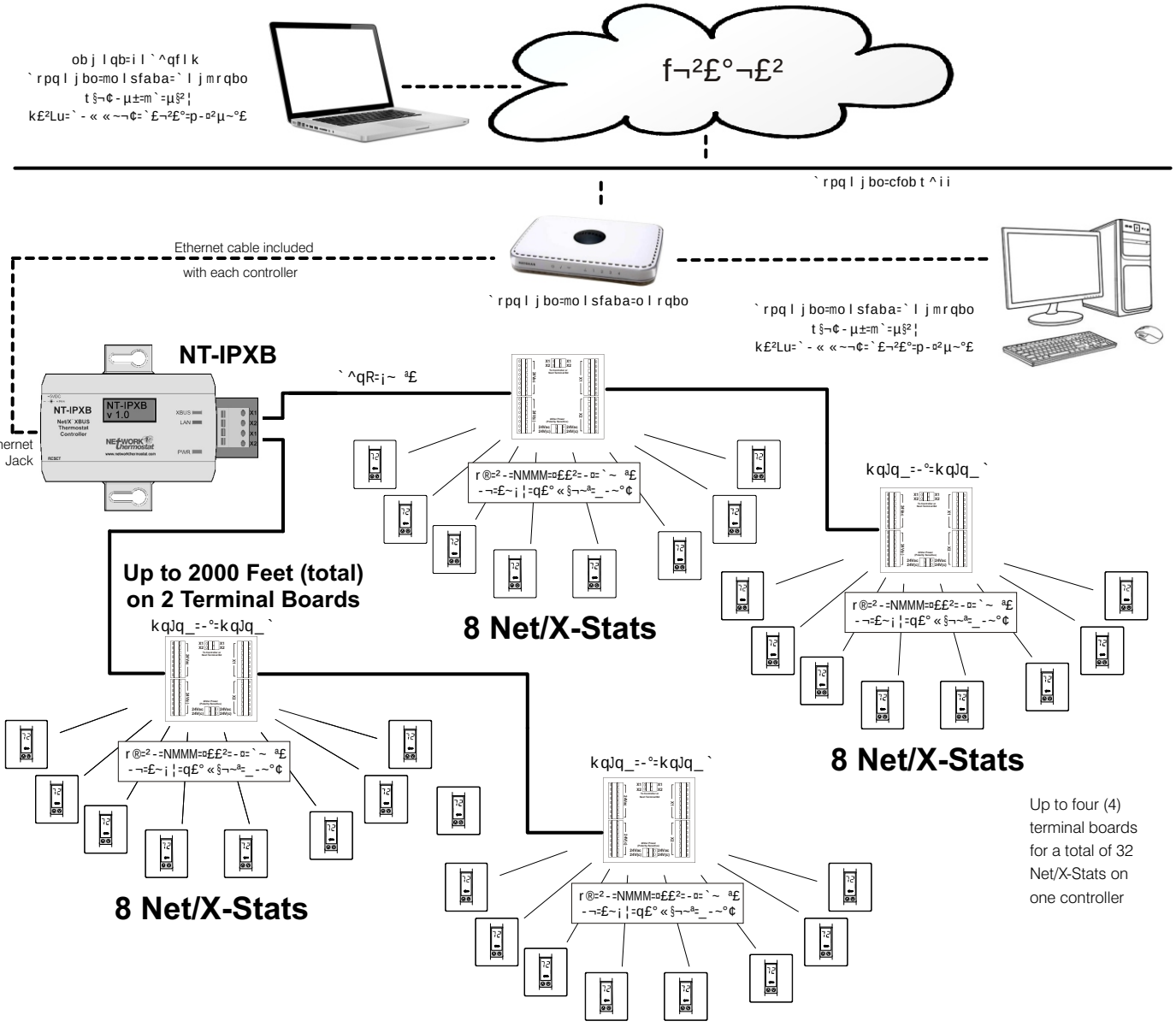

`~ ª£=~¬¢=t§°§¬¥=k-²£±
^ªª=k£²µ-°©q¦£°«-±²~²=®°-¢³¡²±=¤-ªª-µ=§¬¢³±²°·=±²~¬¢~°¢=
¢~²~=¡-««³¬§¡~²§-¬±=µ§°§¬¥=®°~¡²§¡£±K==o£¤£°=²-=·-³°=
ª-¡~ª= ³§ª¢§¬¥=¡-¢£±=¤-°=±®£¡§¤§¡=°£¯³§°£«£¬²±K

t§°§¬¥=d³§¢£ª§¬£±
^F=^¬·=k£²Lu=²¦£°«-±²~²=¡~¬= £=³®=²-=NIMMM=¤££²=~µ~·
====¤°-«=²¦£=k£²µ-°©=`-¬²°-ªª£°=E¡~ ª£=¢§±²~¬¡£F
_F=q-²~ª=-¤=QIMMM=¤££²=-¤=¡~ ª£=-¬=~¬·=-¬£=¡-¬²°-ªª£°
====EOIMMM=¤££²=-¬=£~¡¦=u_rp=¡-««=¡§°¡³§²=EuNJuOF
`F=e-«£=°³¬=E±²~°F=u_rp=¡~ ª£±=¤°-«=£~¡¦=²¦£°«-±²~²=²-=
====²£°«§¬~ª= -~°¢I=²¦£¬=²£°«§¬~ª= -~°¢=²-=kqJfmu_
aF=kqJq_`=-°=kqJq_=²£°«§¬~ª= -~°¢±=«~·= £=®ª~¡£¢
=====~¬·µ¦£°£=µ§²¦§¬=²¦£=NIMMM=¤££²

`~ ª£=p®£¡§¤§¡~²§-¬±
k£²Lu=u_rp=q¦£°«-±²~²=`~ ª£=o£¯³§°£«£¬²W

`~²£¥-°·=RI=OQ^tdI=QJ®~§°=G
=G==r±£=o§±£°I=mª£¬³«=-°=r¬¢£°¥°-³¬¢=¡~ ª£=~±
=====°£¯³§°£¢= ·=¡-¢£=~¬¢=§¬±²~ªª~²§-¬=²·®£K

`-««³¬§¡~²§-¬±
m~§°=N=J=u_rp=`-««³¬§¡~²§-¬±=_³±
uN=J=_ª³£Lt¦§²£=p²°§®£
uO=J=_ª³£

o£«-²£=m-µ£°=-´£°=`-««=_³±=El®²§-¬~ªF
fjmloq^kqW=
objlsb=vbiilt=grjmbo=lk=_^`h=lc=qebojlpq^q
m~§°=O=J=o£«-²£=m-µ£°=EOQs^`=e-²F
qµ§±²=²-¥£²¦£°=d°££¬=and Green/White=p²°§®£

m~§°=P=J=o£«-²£=m-µ£°=EOQs^`=`-««-¬F
qµ§±²=²-¥£²¦£°=_°-µ¬=and=_°-µ¬/White=p²°§®£

m~§°=Q=J=k-²=r±£¢
¶¶=J=l°~¬¥£=
¶¶=J=l°~¬¥£Lt¦§²£=p²°§®£

q£ª£®¦-¬£=EUSSF=RSPJMTNN
`-®·°§¥¦²=OMNP=k£²µ-°©q¦£°«-±²~²=====d°~®£´§¬£I=qu

mLk=OQMNTUJN

q·®§¡~ª=u_rp=~¬¢=p²º-¬¥ j £±¦=t §°£ª£±±=k£²µ-°©
¤-º=kqJfmu_=k£²µ-°©=` -¬²º-ªª£°

Total of 32 thermostats on one (1) NetworkThermostat NT-IPXB Controller

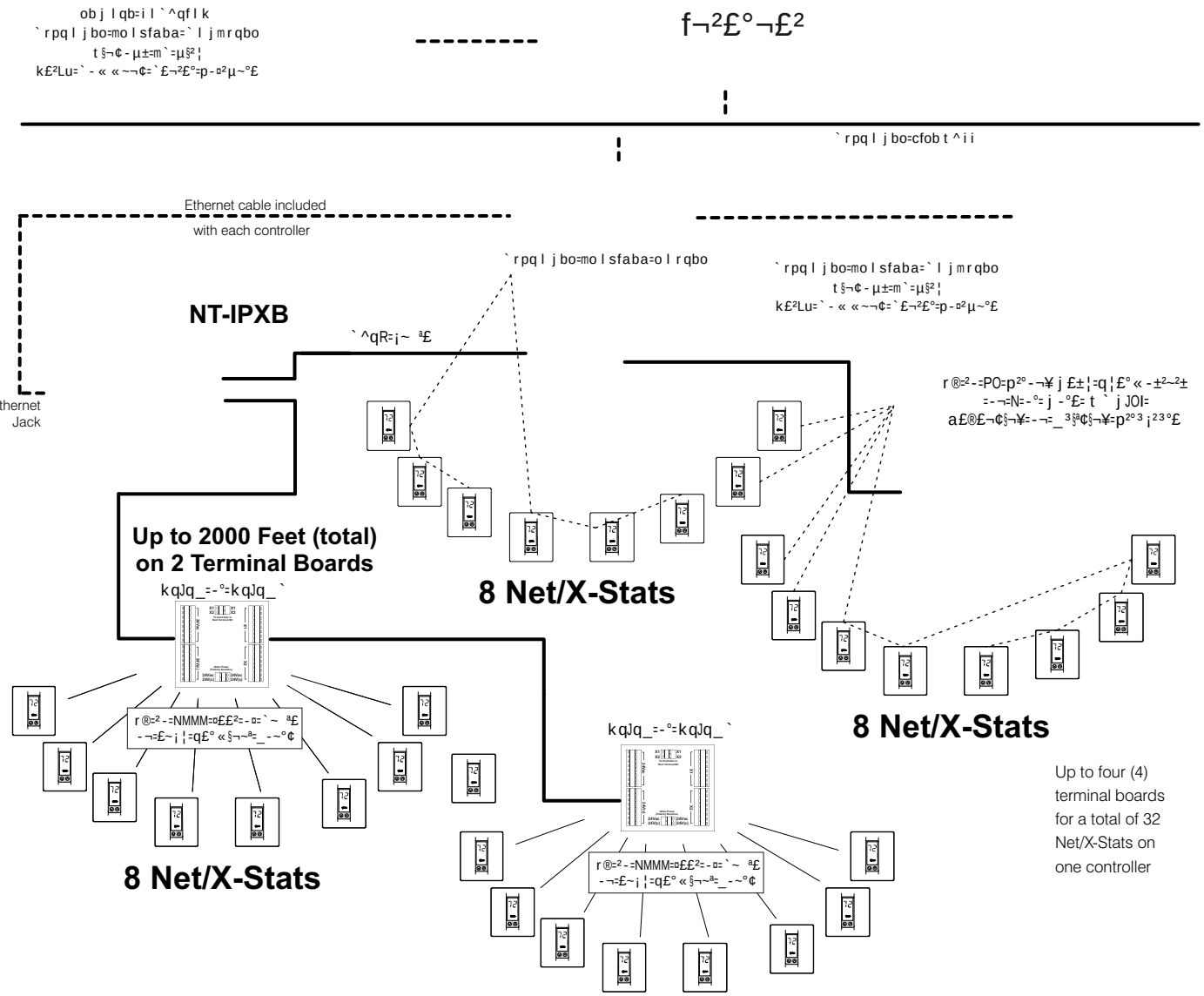

`~ ª£=~¬¢=t§°§¬¥=k-²£±
^ªª=k£²µ-°©q¦£°«-±²~²=®°-¢³¡²±=¤-ªª-µ=§¬¢³±²º·=±²~¬¢~°¢=
¢~²~=¡-««³¬§¡~²§-¬±=µ§°§¬¥=®°~¡²§¡£±K==o£¤£°=²-=·-³°=
ª-¡~ª= ³§ª¢§¬¥=¡-¢£±=¤-°=±®£¡§¤§¡=°£¯³§°£«£¬²±K

t§°§¬¥=d³§¢£ª§¬£±
^F=^¬·=k£²Lu=²¦£°«-±²~²=-°=t ` jJO=¡~¬= £=³®=²-=NIMMM=
¤££²=~µ~·=¤°-«=²¦£=k£²µ-°©=`-¬²º-ªª£°=E¡~ ª£=¢§±²~¬¡£F
_F=q-²~ª=-¤=QIMMM=¤££²=-¤=¡~ ª£=-¬=~¬·=-¬£=¡-¬²º-ªª£°
====EOIMMM=¤££²=-¬=£~¡¦=u_rp=¡-««=¡§°¡³§²=EuNJuOF
`F=e-«£=°³¬=E±²~°F=u_rp=¡~ ª£±=¤°-«=£~¡¦=²¦£°«-±²~²=²-=
====²£°«§¬~ª= -~°¢I=²¦¬=²£°«§¬~ª= -~°¢=²-=kqJfmu_
aF=kqJq_`=-°=kqJq_=²£°«§¬~ª= -~°¢±=«~·= £=®ª~¡£¢
=====~¬·µ¦£°£=µ§²¦§¬=²¦£=NIMMM=¤££²
bF=a-=k lq=«§¶=u_rpJµ§°£¢=~¬¢=p²º-¬¥ j £±¦=t§°£ª£±±=-¬
=====-¬=²¦£=±~«£=kqJfmu_=u_rp=¢°§´£

`~ ª£=p®£¡§¤§¡~²§-¬±
k£²Lu=u_rp=q¦£°«-±²~²=`~ ª£=o£¯³§°£«£¬²W

`~²£¥-°·=RI=OQ^ tdI=QJ®~§°=G
=G==r±£=o§±£°I=mª£¬³«=-°=r¬¢£°¥°-³¬¢=¡~ ª£=~±
=====°£¯³§°£¢= ·=¡-¢£=~¬¢=§¬±²~ªª~²§-¬=²·®£K

`-««³¬§¡~²§-¬±=Eq-=²¦£°«-±²~²±=~¬¢=t ` jJOF
m~§°=N=J=u_rp=`-««³¬§¡~²§-¬±=_³±
uN=J=_ª³£Lt¦§²£=p²°§®£
uO=J=_ª³£

o£«-²£=m-µ£°=-´£°=`-««=_³±=E l®²§-¬~ªF
fjmloq^kqW=
objlsb=vbiilt=grjmbo=lk=_^`h=lc=qebojlpq^q
m~§°=O=J=o£«-²£=m-µ£°=EOQs^``=e-²F
qµ§±²=²-¥£²¦£°=d°££¬=and Green/White=p²°§®£

m~§°=P=J=o£«-²£=m-µ£°=EOQs^``=`-««-¬F
qµ§±²=²-¥£²¦£°=_°-µ¬=and=_°-µ¬/White=p²°§®£

m~§°=Q=J=k-²=r±£¢
¶¶=J=l°~¬¥£=
¶¶=J=l°~¬¥£Lt¦§²£=p²°§®£